*Cindy Drozda*

# Twisted Multi-Axis Box

www.cindydrozda.com

1. Your blank should have smooth, square ends.
2. It works equally well to start with a square blank, or a rough one that you turn round first.
3. Find the center of the piece of wood on both sides. Rough down to round if desired.
4. Make a reference line that joins the top and bottom layouts. This can either be one corner of the square blank, or a line drawn using the toolrest as a guide.
5. Draw a diameter line from the reference line through center on both sides of the blank.
6. Use a good quality compass with a pencil lead type point. Sharpen the lead with a piece of sandpaper laid flat on the table.
7. Use a ruler with engraved lines for increased accuracy.

Blue - Major Diameter, enclosing all points of the triangle

Red - Indicates largest solid cylinder within the triangle

Green - Circle on which the drive center points are marked.

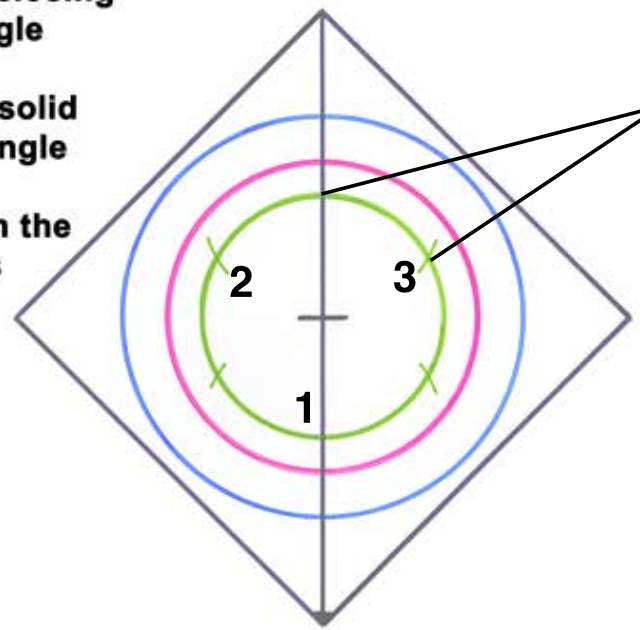


Compass set to Green Radius scribes arcs to divide the circumference of the circle into 6 equal arcs

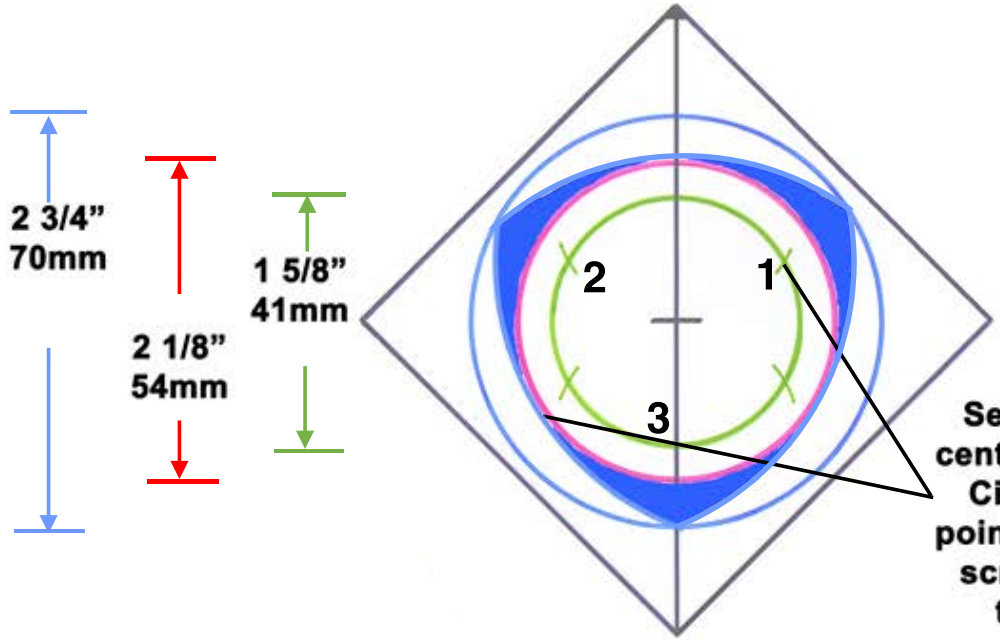


Set Compass from center point on Green Circle to opposite point on Red Circle to scribe arcs of Blue triangle points

1. Pick up your layout marks accurately with an awl mark, being careful not to let the wood grain push the awl away from the layout mark.
2. Pay attention to having the 3 centers numbered clockwise on one end of the blank, counter-clockwise on the other.
3. Rotate the 3 centers the desired amount on one side of the blank in relation to the other side to get a twist.

1. The more the top and bottom layouts are rotated in relation to each other, the steeper the twist angle will be.
2. The further apart the top and bottom of the box are, the shallower the twist angle will be.
3. A taller box will look better with more twist.
4. A shorter box will look better with less twist.

1. Use live and drive centers with sharp points for the turning.
2. Use smaller diameter live and drive centers. 1/2” diameter is a good choice.
3. Wear sufficient PPE to feel safe!
4. Be sure the blank is held tightly between centers.
5. Use a safe spindle speed for the turning.
6. The faster you are able to safely turn the spindle speed, the easier it will be to get a clean, straight cut.
7. Turn the Multi-Axis Triangle shape using the 3 sets of centers on the Green diameter.
8. Cut until each side contacts the Red diameter tenon. It helps to blacken the tenon so it is easier to see.
9. Sand the Multi-Axis outside of the box completely
10. Cut chucking tenons on both ends, creating a shoulder to bear up against the face of the chuck jaws.

**Design your box within the Red Diameter to keep from exposing the lid tenon on the sides of the box.**

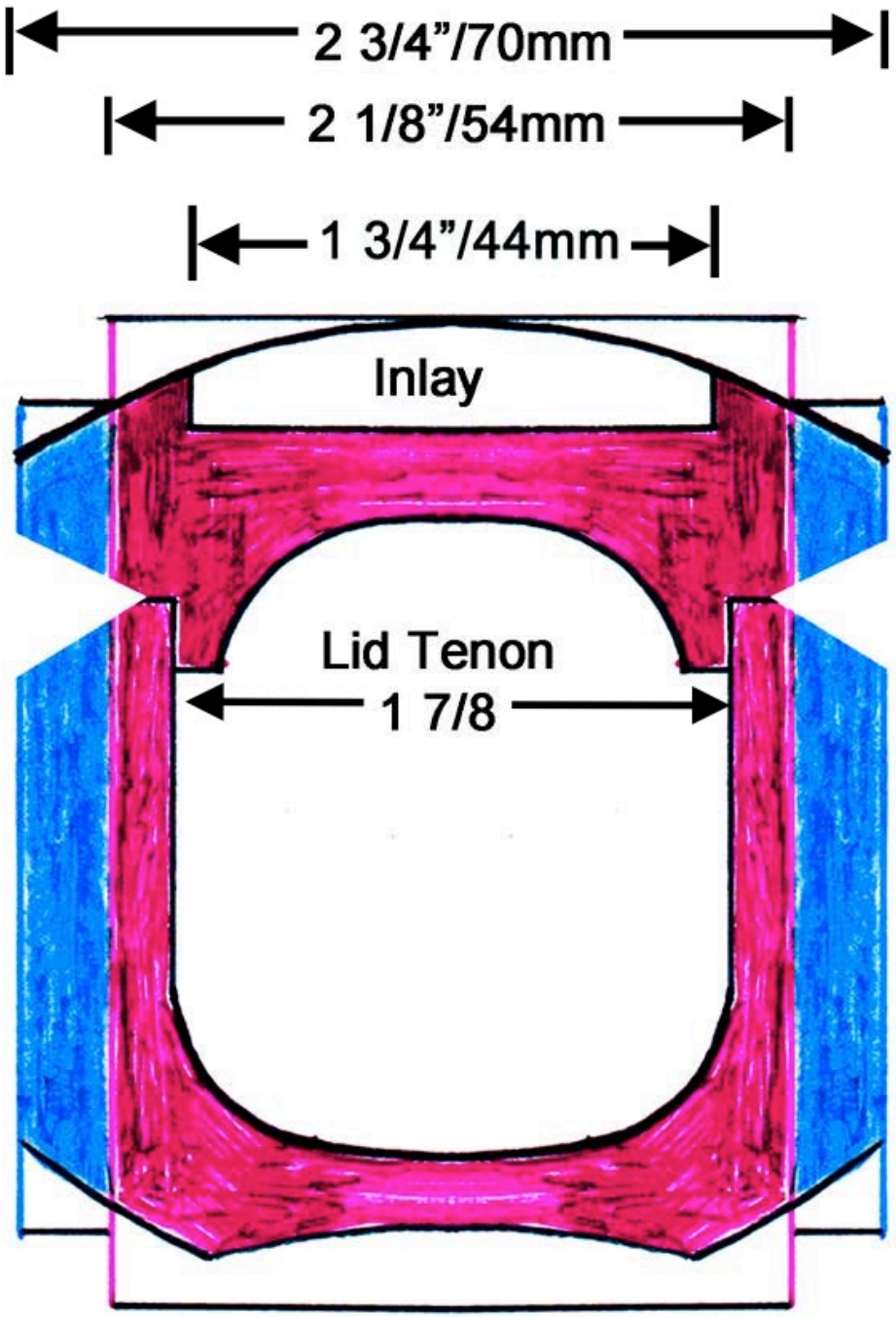

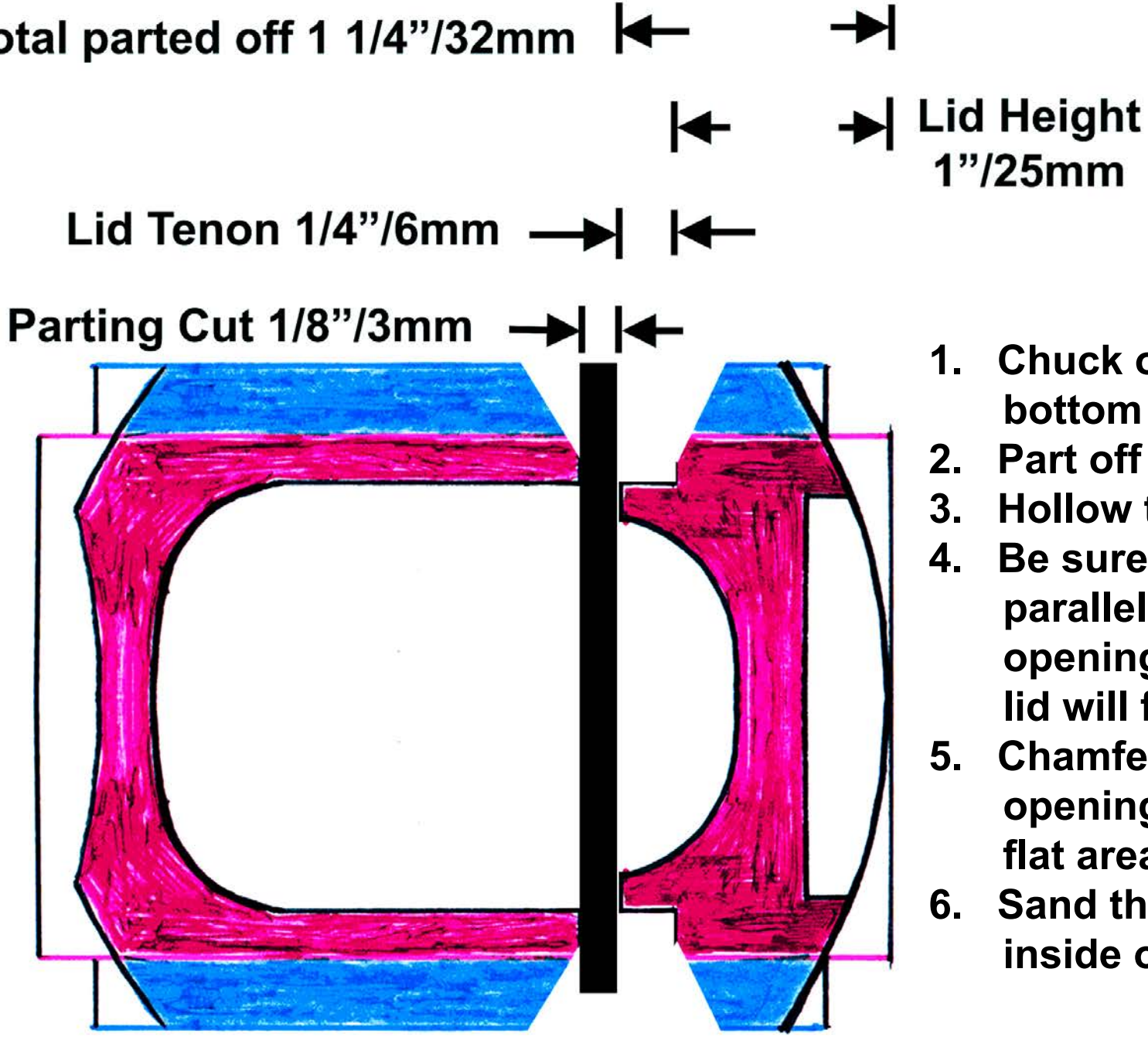


1. Chuck on the bottom of the box.
2. Part off the Lid.
3. Hollow the box.
4. Be sure to create a parallel wall at the opening where the lid will fit.
5. Chamfer the opening, leaving a flat area at the rim.
6. Sand the rim and inside of the box.

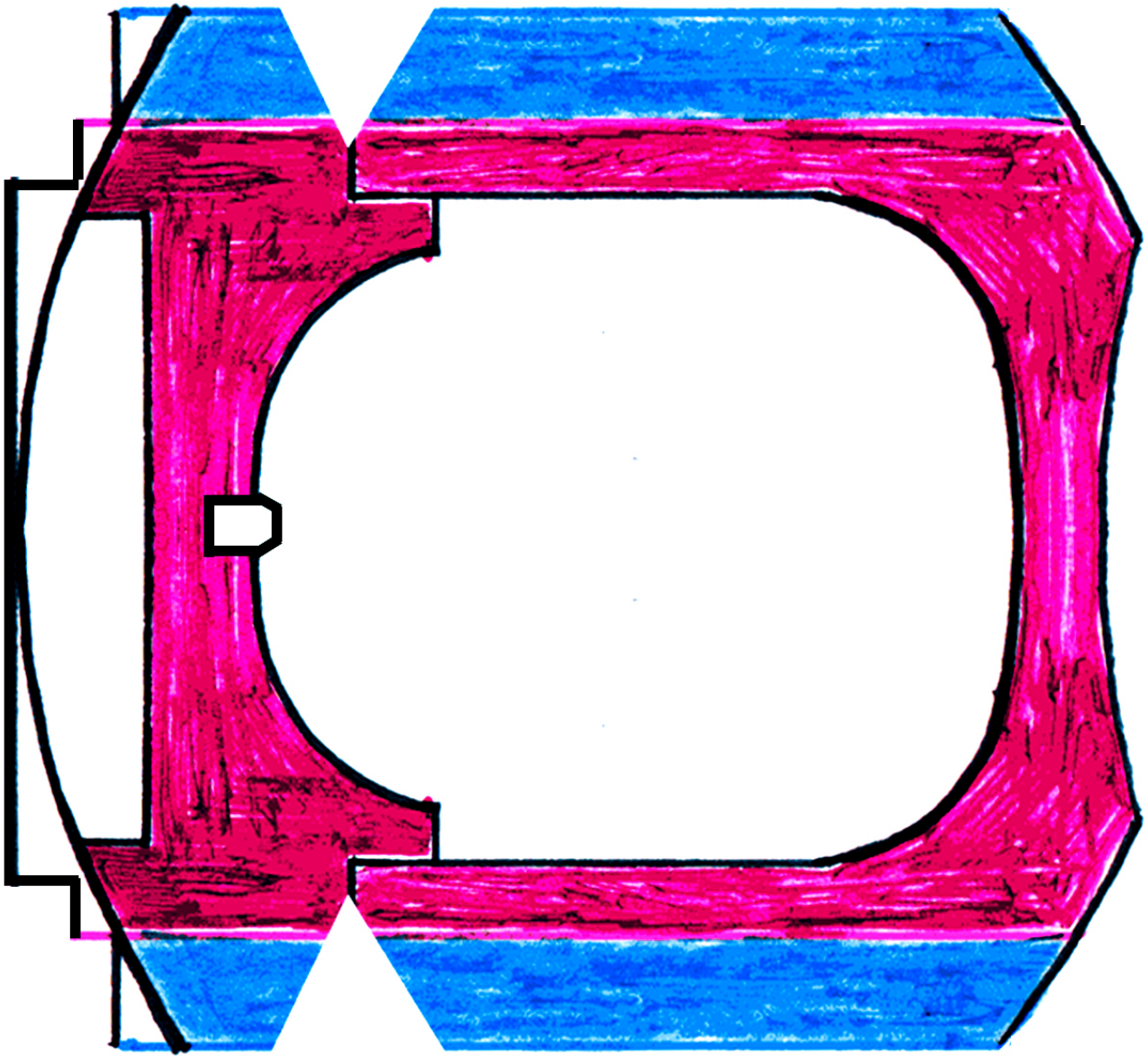

1. Chuck on the lid
2. Cut a tenon to jam-fit the box bottom.
3. Shape and sand the bottom.

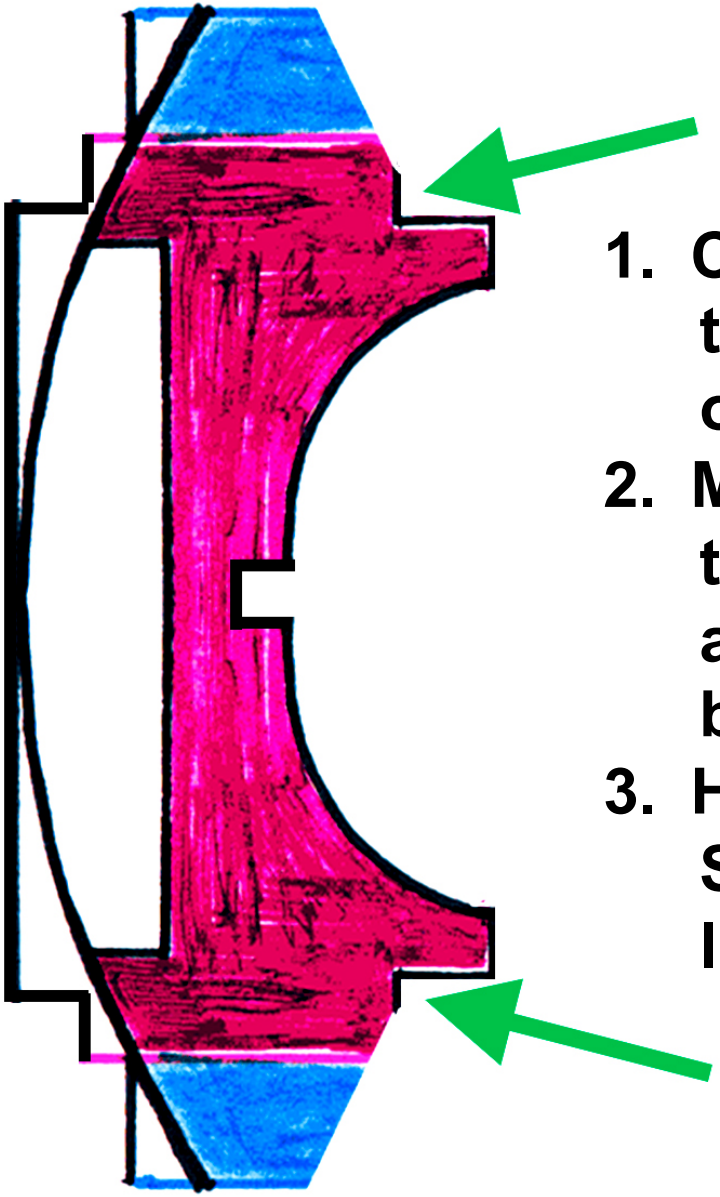

1. Create a chamfer on the lid to match the one on the bottom.
2. Match the flat next to the tenon with the one at the rim on the bottom.
3. Hollow, Detail, and Sand the inside of the lid.

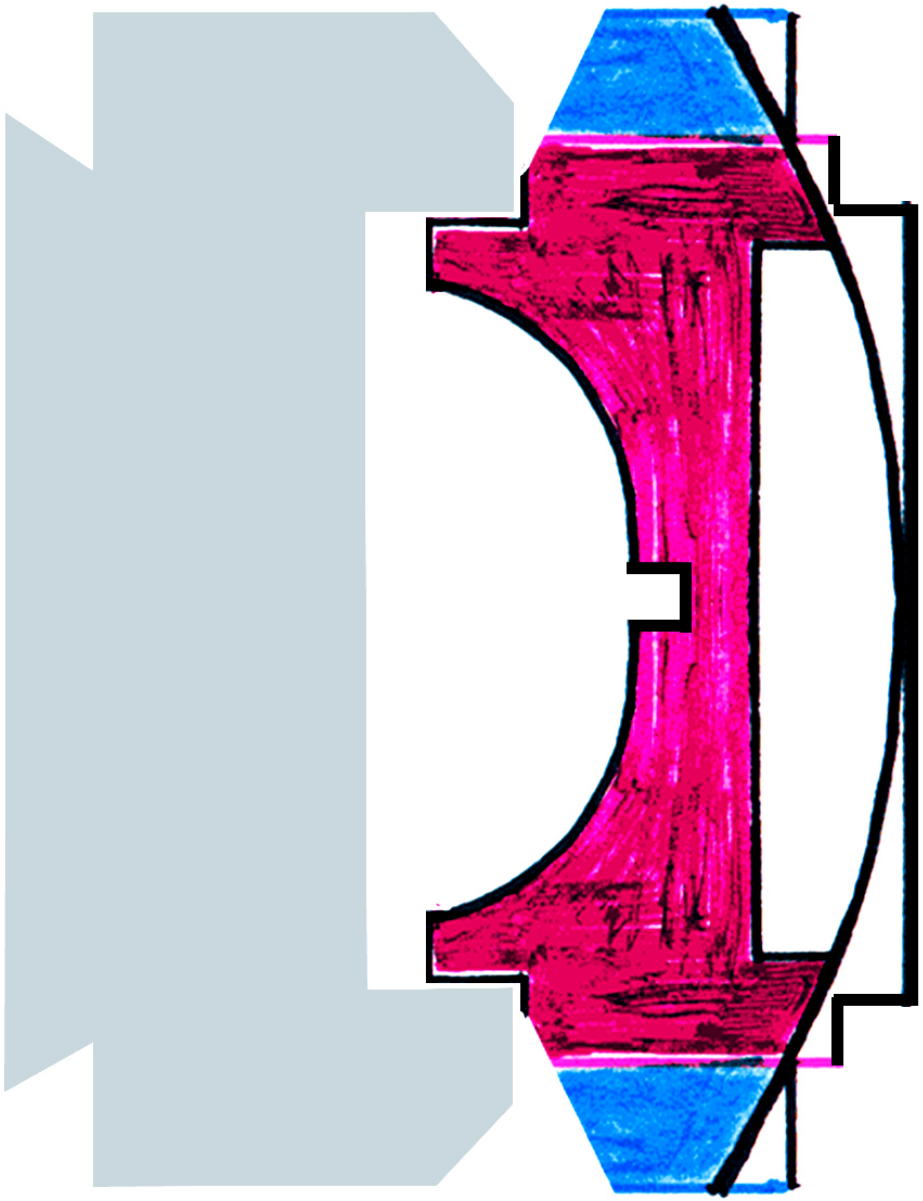

1. Size the inlay using a friction drive, either the chuck jaws or a flattened waste block.
2. Jam fit the lid into a recess in the waste block. Chamfer the waste block so you can get your fingers in to remove the lid.
3. Drill a hole through the waste block for insurance.
4. Shape the top of the box.
5. Cut a recess for the inlay and glue it in, clamp with the tailstock
6. Shape the inlay, add a bead or half-bead if desired, and sand.

1 – The flush inlay

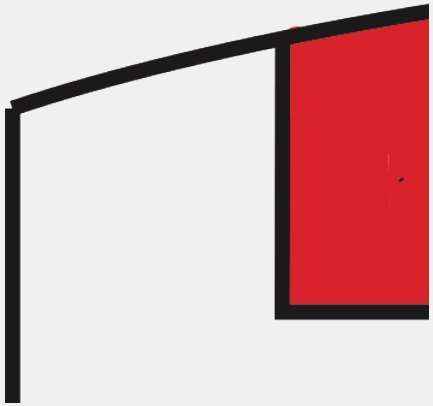

2 - Cut a Vee Groove parallel to the joint line

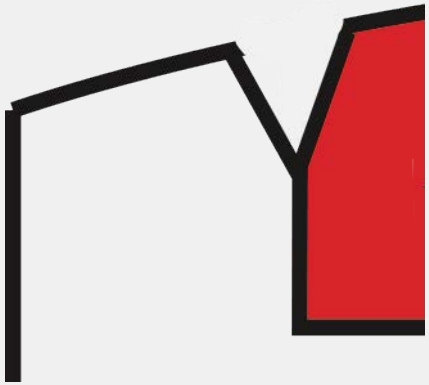

3 – Chamfer the top corners of the Vee Grooves

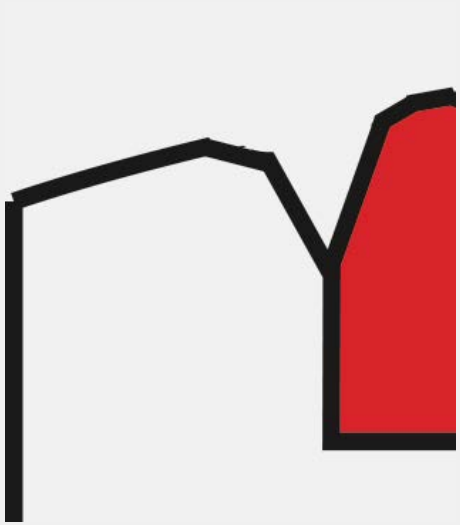

4 - Sand to a smooth round bead or half bead with double sided abrasive